Emerging Applications in the Connected Home

Andrew Wolfe, Ph.D.
CTO
SONICblue Incorporated

SONIC blue

Overview

- The post-PC era in processors
- The Connected Home
- Growth drivers for next-generation products
- Current and emerging applications
- System architectures
- Impact on CPU microarchitecture

Why were there 50 people last time Yale ran Micro and there are 350 here today?

Importance of computers in the general economy

Business Productivity

Increasingly more efficient production of goods and services

- Lower cost
- Faster response

Greenspan - "PC drove productivity gains"

Growth of Intel, IBM, HP, etc.

Post-Greenspan Economy

Consumption Productivity

More efficient consumption of goods and services

- Individual targeting (goods & services you want)
- Increased utility
- More effective delivery (where & when you want them)
- Extracting value from personal information
- Anticipating needs and desires
- Creating needs and desires

Changes in communication

Broadcasting ➡ *Narrowcasting*

Mass Media ➡ *Targeted Messaging*

Mass Production ➡ *Mass Customization*

Entertainment content will lead the change

The Connected Home

- Digital technology -> new class of consumer electronics
  - Networked digital audio
  - Networked digital video
  - Information appliances

- Networking connects devices - content is shared
- Personalization cusomizes user experiences
- Capabilities driven by software and services
- Constant direct feedback improves targeted products

SONICblue

What does "Connected Home" mean?

- Always-on broadband service
- Whole-house distribution (just like AC power)
- Networked digital audio & video
- Application-specific information appliances
- Distributed content database - seamless storage
- Internet-based content services
- Personalized interfaces for each family member
- Legacy system and content compatibility
- No administration or maintenance

The Connected Home - 2001

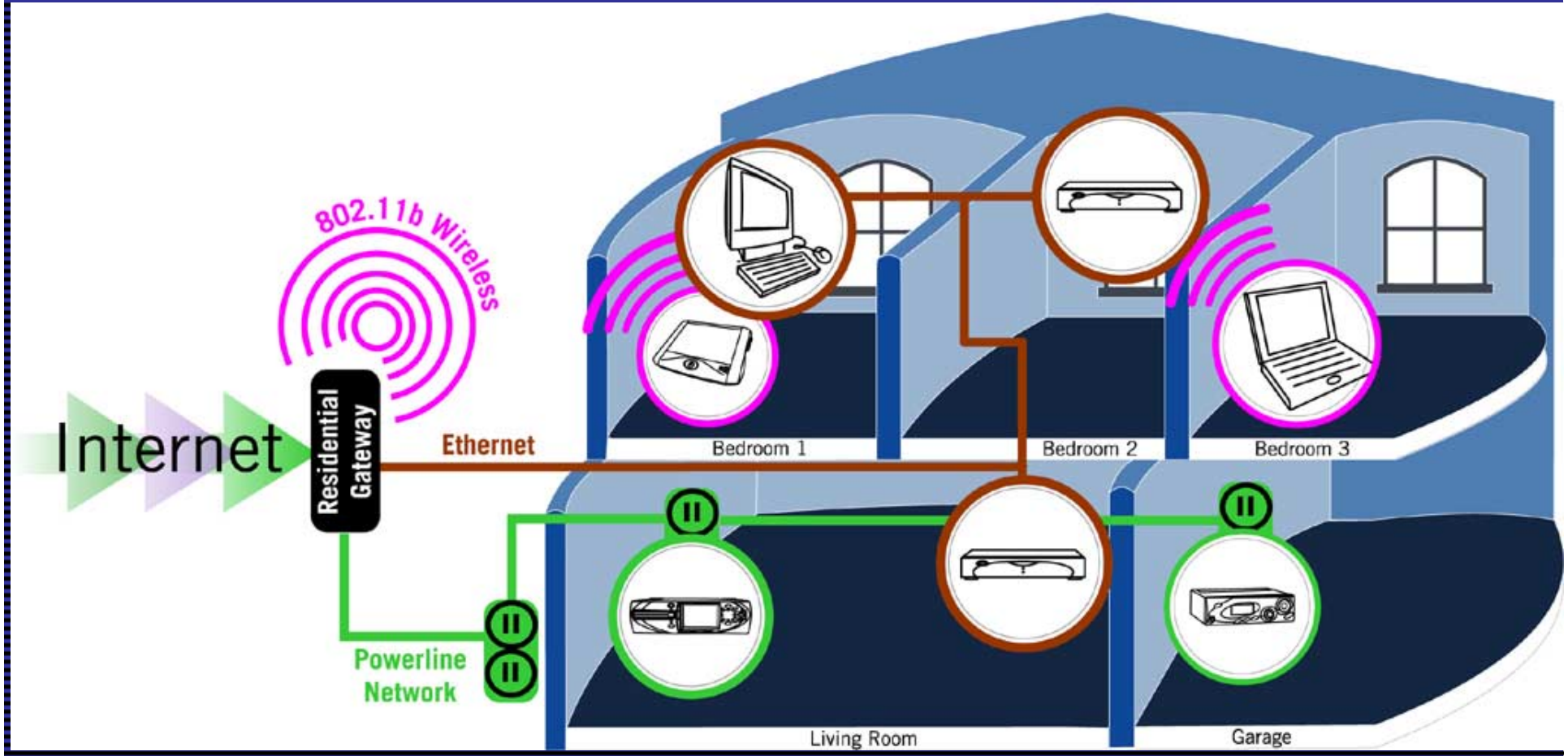

The Evolving Connected Home

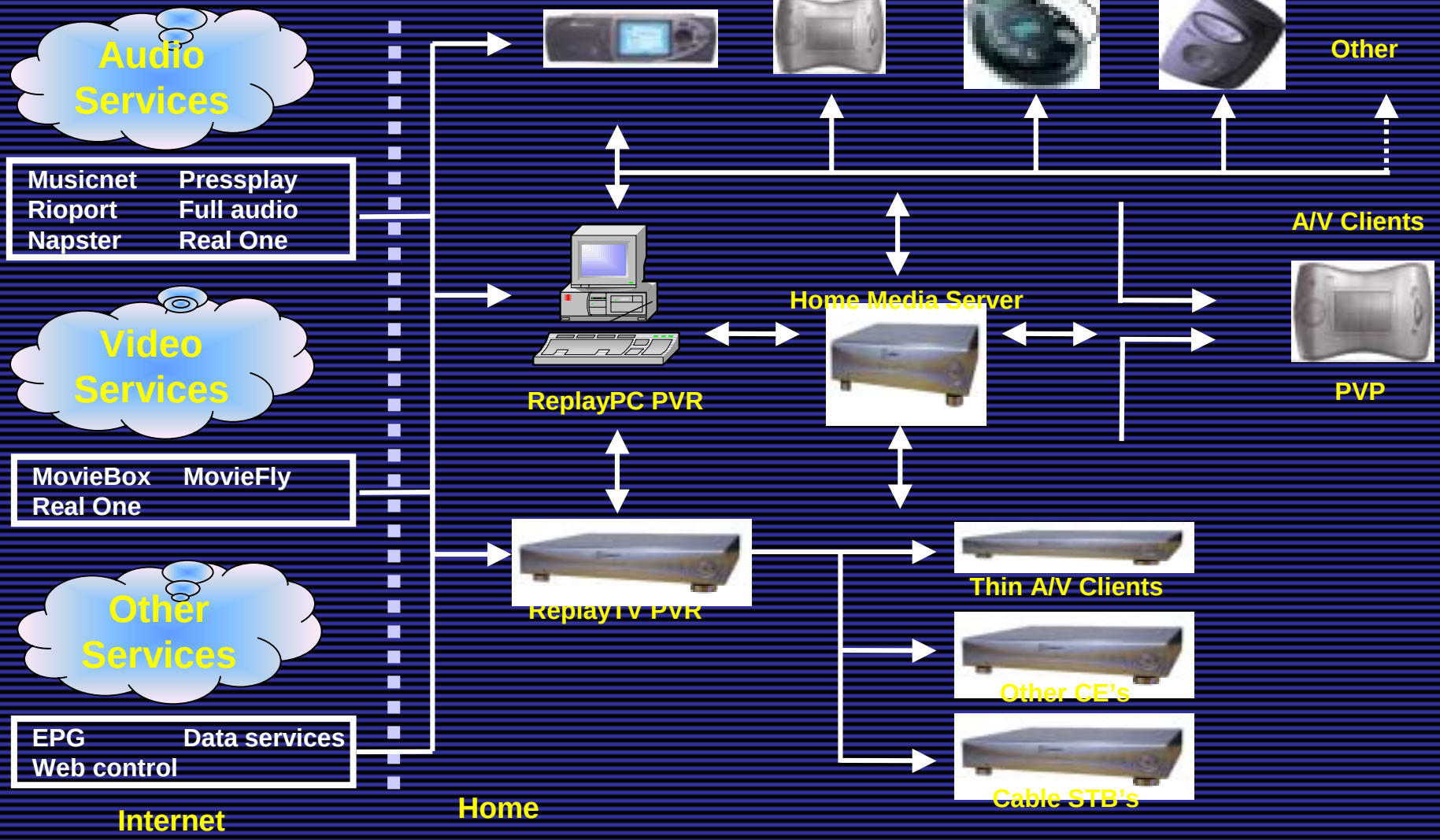

Broadband deployment

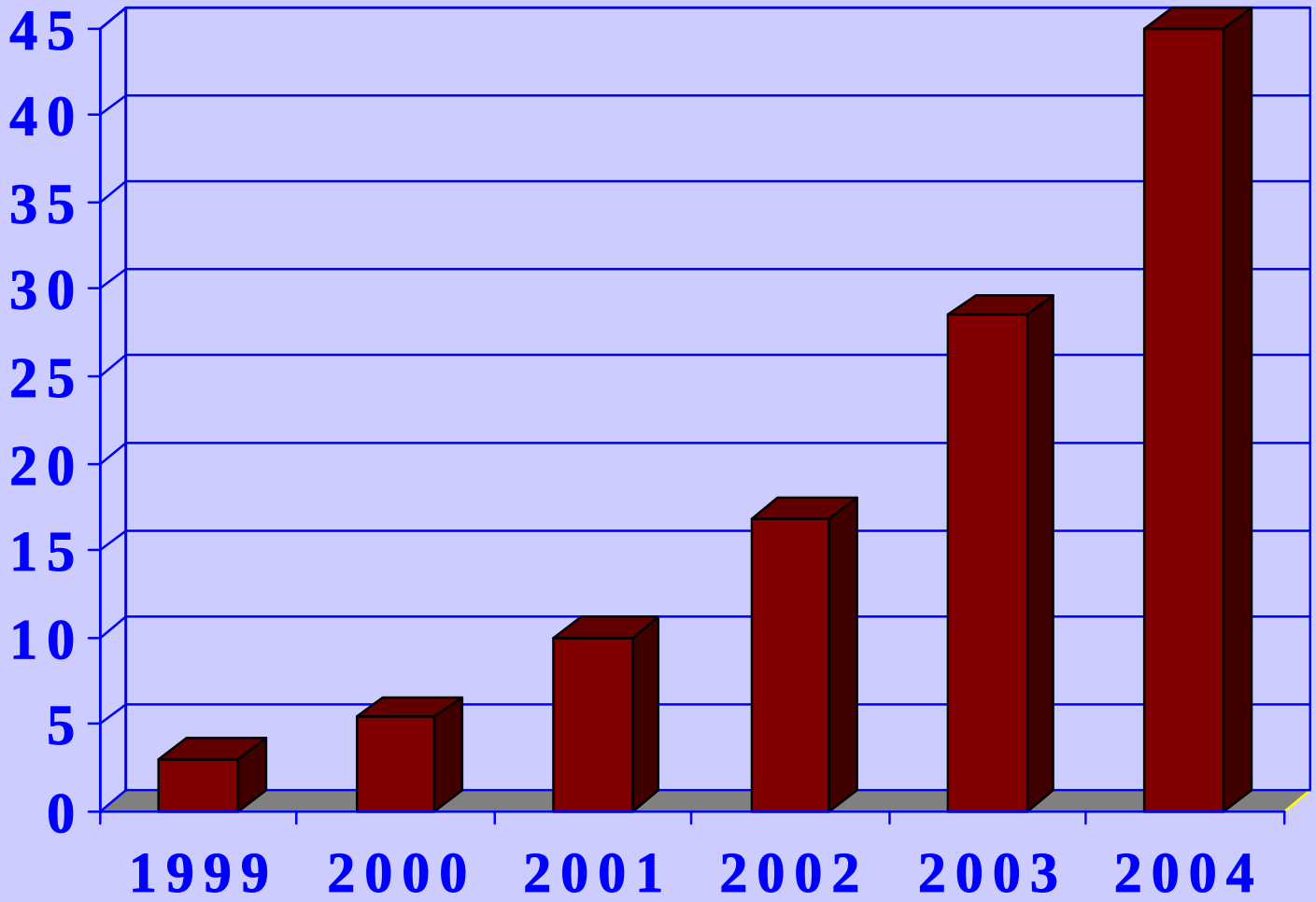

Broadband Households (millions)

IDC data

Or maybe not…

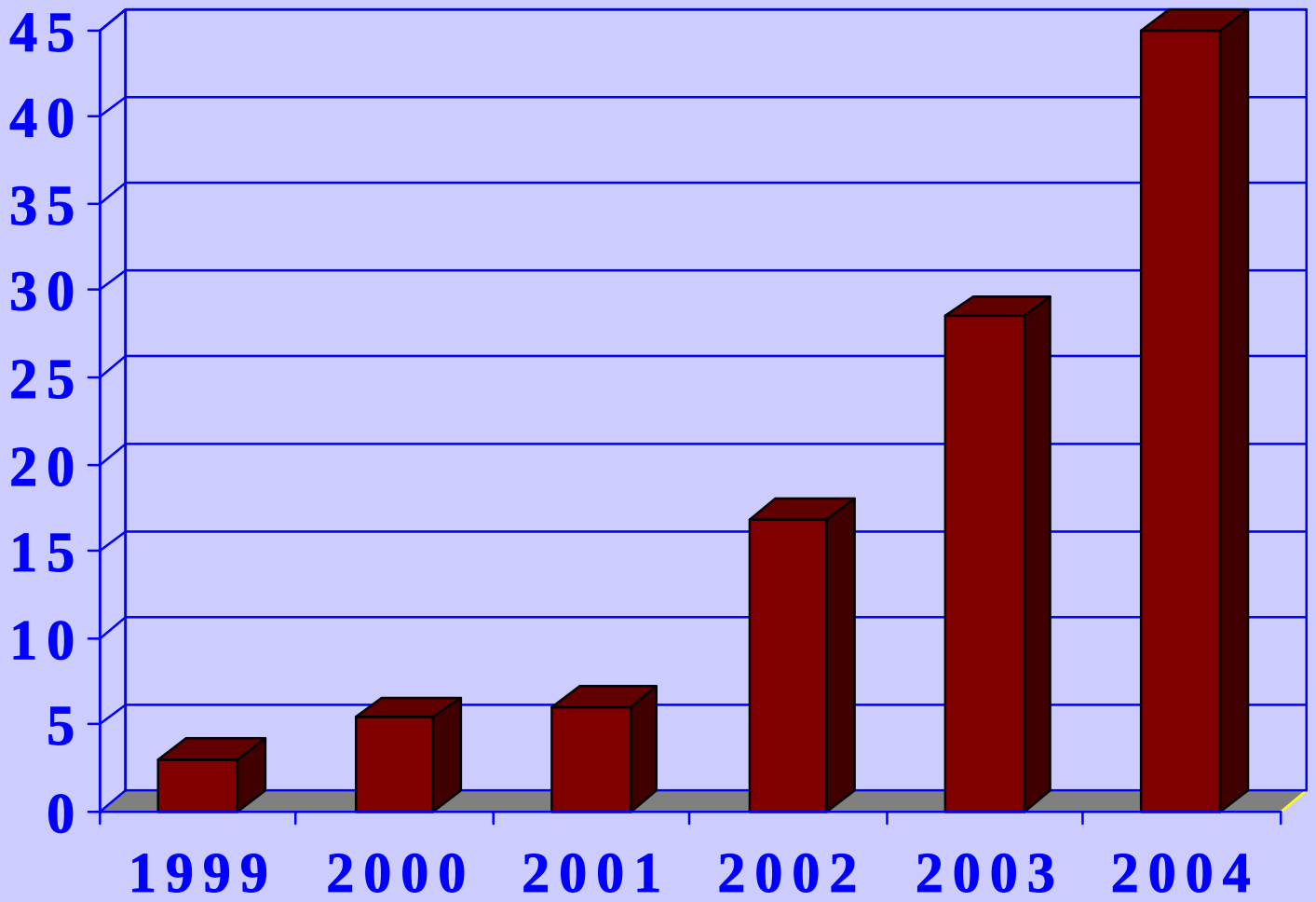

Broadband Households (millions)

IDC data

Home PC deployment

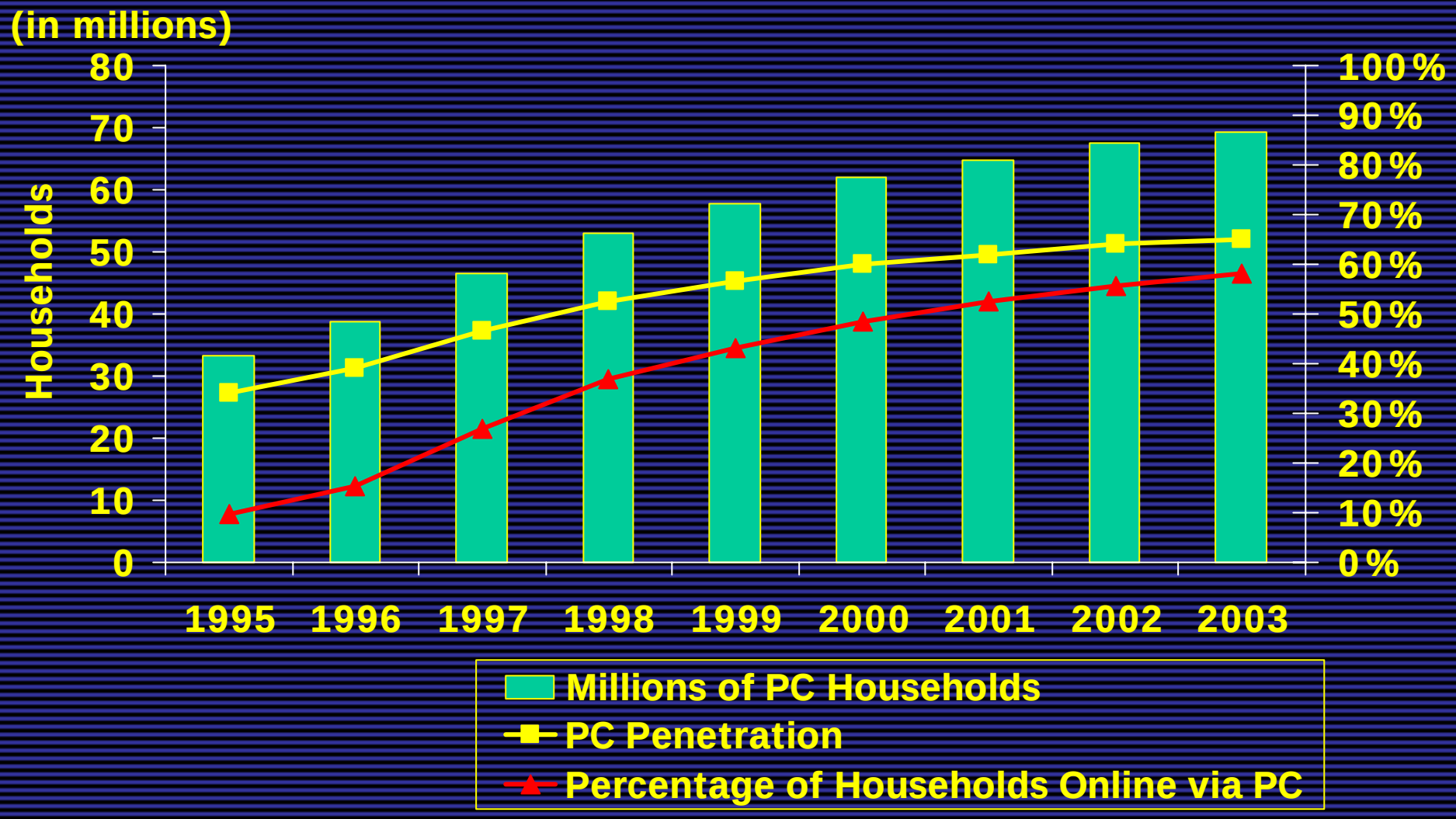

Source: Jupiter Projections

Cable/Satellite

Homes in millions

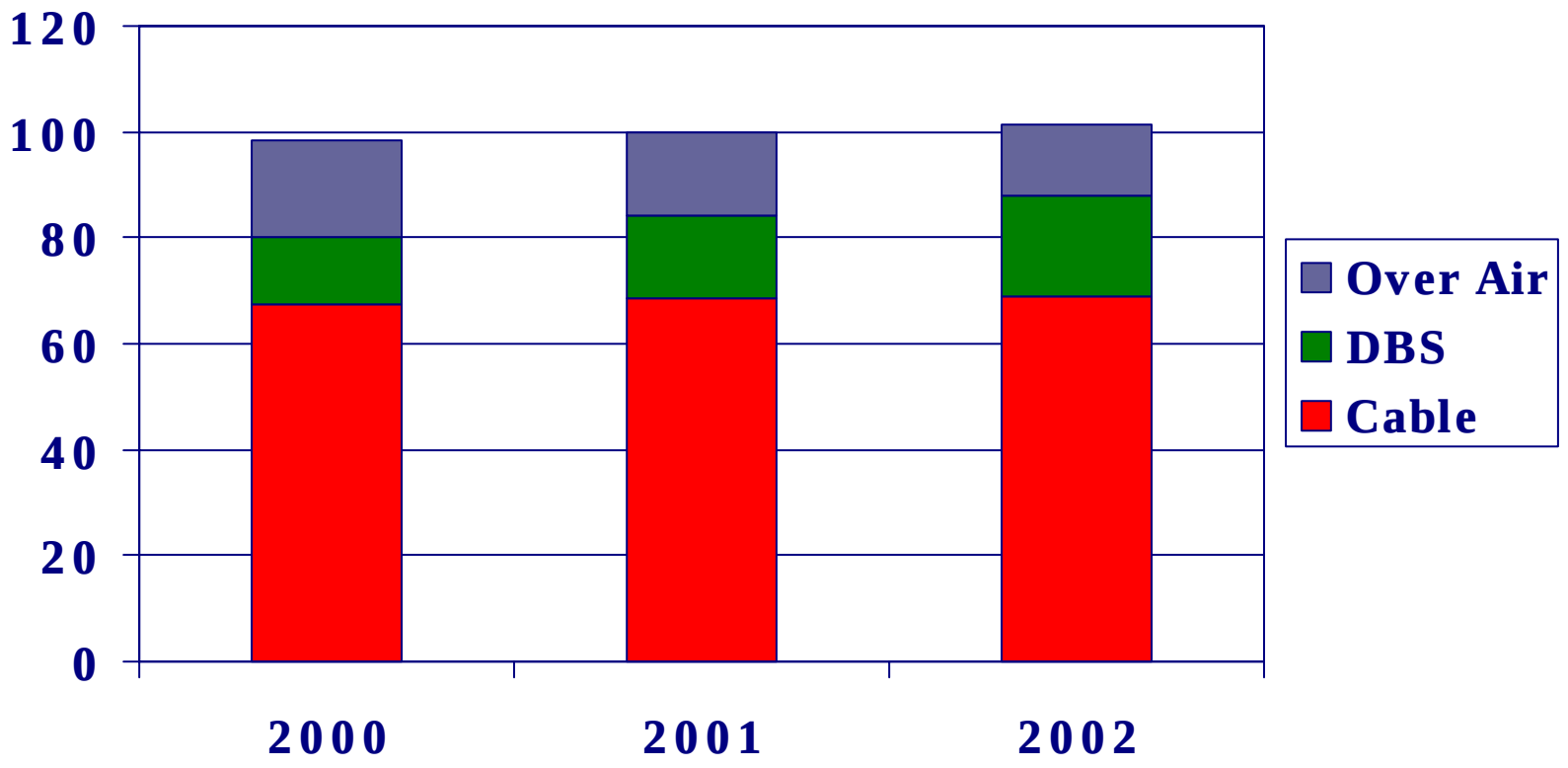

Entertainment spending

Kagan Consumer Media Index					
(All Figures Are Per Month)	**1997**	**1998**	**1999**	**2000**	**2001**
Full-service basic subscription rev./U.S. home	$16.87	$18.01	$18.81	$19.12	$19.95
Cassette sales & rental rev./U.S. home	12.99	13.94	14.47	15.42	17.47
Location-based entertainment rev./U.S. home	15.13	16.31	16.40	16.67	17.44
Recorded Music rev./U.S. home	8.60	9.36	9.85	9.27	9.26
Newspaper subscription rev./U.S. home	8.66	8.80	8.76	8.49	8.54
Magazine subscription rev./U.S. home	8.10	8.59	8.47	8.09	8.02
Movie spending/U.S. home	6.98	7.59	8.64	7.96	8.63
Spectator sports admission rev./U.S. home	5.46	6.67	6.57	7.14	7.34
Premium TV subscription rev./U.S. home	5.96	6.38	6.67	6.94	7.30
Internet subscription rev./U.S. home	3.03	4.19	5.35	6.09	7.07
Pay-per-view purchases/U.S. home	0.91	0.86	1.17	1.34	1.87
Media Spending Per Household	**$92.68**	**$100.71**	**$105.15**	**$106.51**	**$112.89**

Target households are 3-5x higher

Technology drivers

- High-bandwidth data delivery to the home
  - But still no reliable QOS
- Cheap LAN technology
  - Leveraging PC technology - still no QOS
  - "No New Wires" solutions (10Mb/s class)
    - 802.11b
    - HPNA
    - HomePlug
  - Residential gateways (home routers/firewalls)
- Ubiquitous protocols (TCP/IP, DHCP, etc.)
- Datacasting

Technology Drivers

- Low cost storage
  - Hard Disk - $1-$2/GB
  - DRAM - $60/GB

  - "Push" content models
  - Massive buffering to overcome QOS issues
- Effective data compresion
  - Satisfactory quality for 90+% of consumers
- Economically effective Digital Rights Management
  - for closed systems
- Cheap CPU cycles
- Improved SW development environments

High Growth Opportunities for Processors

- Network signal processing
  - hardwired ASP -> ILP signal processors
  - demodulation, filtering, FEC, etc.
- Sports Cars - fast, lightweight, simple, price-point driven
- Entertainment systems processors
  - hybrid multiprocessors -> fast uniprocessors
  - CODECs, A/V filtering/equalization, communication protocols
  - UI, database, I/O streaming, scheduling, OS
- Minivans - high capacity, flexible, ready for any situation

The Rio Digital Audio Center

- Digital Audio Server
- Rip CDs
- Serve compressed music
- Burn CDs
- Upload portables
- Internet streaming

Application Mix

- Signal Processing
  - Codecs
  - Equalizers
  - Decryption
  - Visualizations
  - Signaturing
- Networking
  - TCP/IP and HTTP stacks
  - Samba
- UI & graphics
- Sequential algorithms
  - Linux
  - File system
  - Stream management
    - Playback
    - Client streaming
    - CD burning
  - Behavior prediction
  - SQL server

A "Sports Car" Architecture

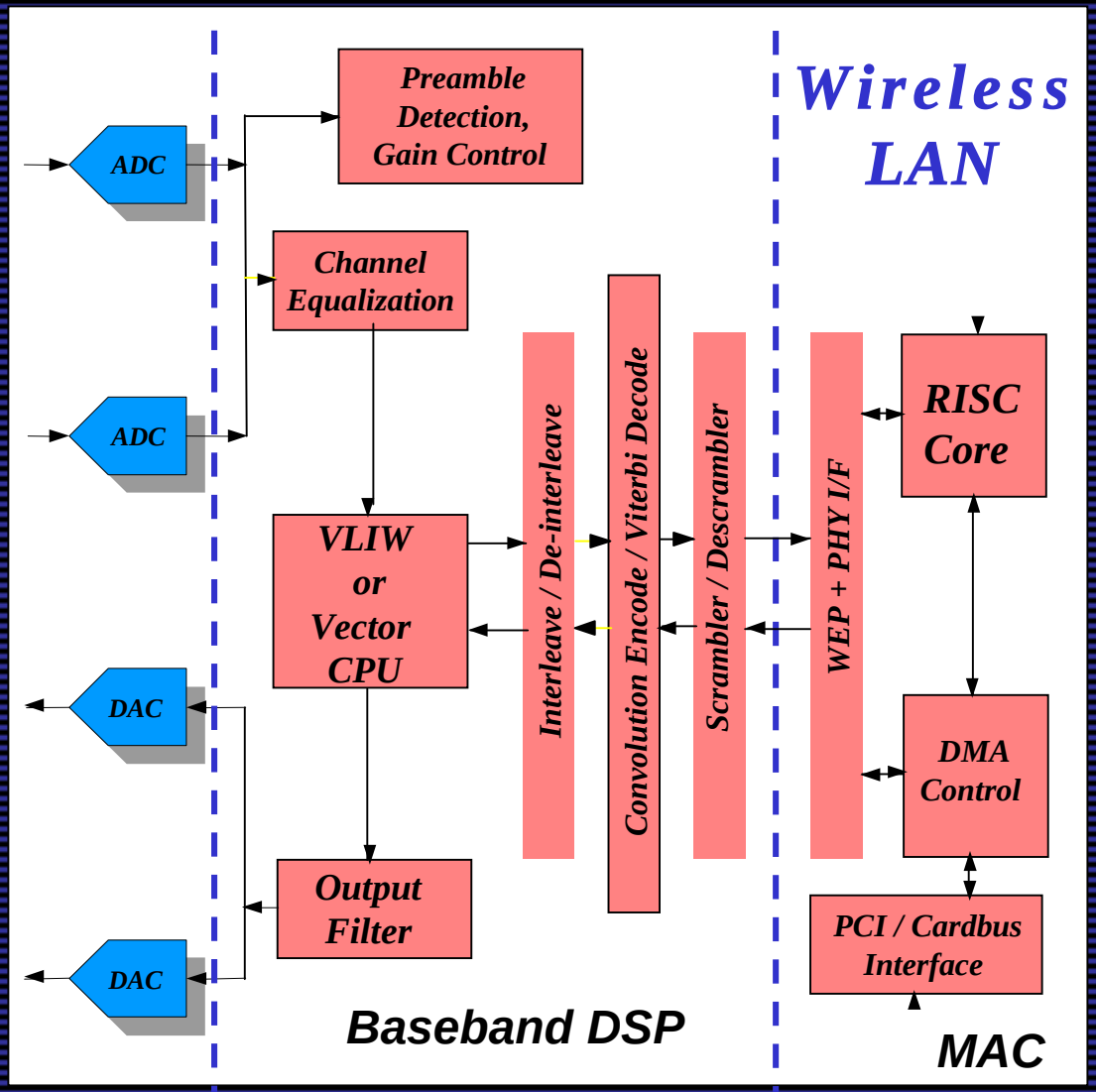

Processor Characteristics

- DSP-style operations
  - vector arithmetic
  - lots of MACs
  - streaming memory accesses
  - advanced addressing modes
- C/C++ programmable @ ~100% performance
- Sustained performance >1Gop/s (real arithmetic ops)
- < 0.5W

A "Minivan" Architecture

Power Supply

Ethernet

Switches

DAC

AMP

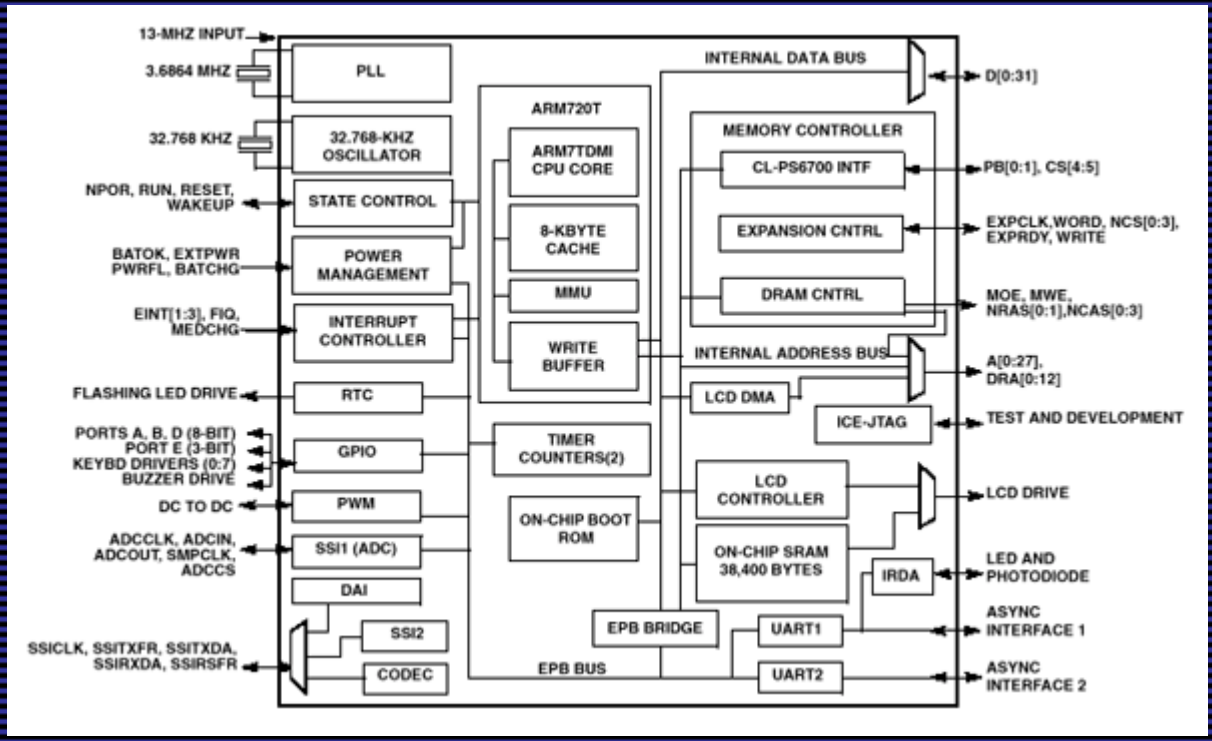

DRAM

Boot ROM

LCD Display

R/C

Clocks & Reset

Debug Port

Rio Receiver

Processor Characteristics

- High Peripheral Integration
- Rich I/O capability
- As much computing power as I get for free
- Caches
- Full MMU

- Linux, MP3/WMA decode, DRM, TCP/IP stacks
- 74MHz, ~90mW
- CPU performance limits feature set

A "PT Cruiser" Architecture

Power Supply

USB

Switches

DAC

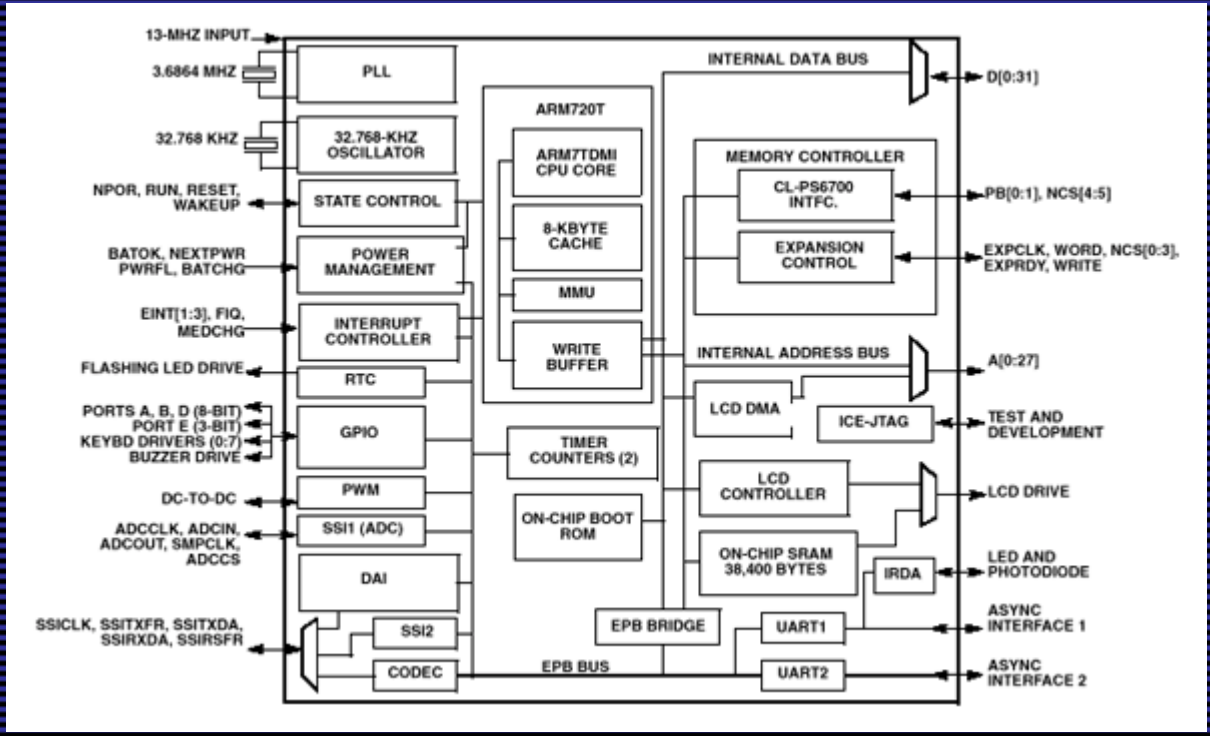

Data Flash

Boot ROM

LCD Display

Clocks & Reset

Debug Port

Rio 600 Handheld

Processor Characteristics

- High Peripheral Integration
- Reduced pin count (same die)
- Any processor available cheap in high volume

- MP3/WMA decode, DRM, UI
- 74MHz, 50mW (sleep mode used heavily)
- CPU power limits feature set

Emerging Applications

- Adaptive transcoding
  - Limited BW networks
  - Device adaptation
- Speech recognition (UI navigation)
- Content identification
- Preference recognition - adaptive behaviors
- Image insertion (product placement)
- Software-configurable radio
  - multistandard support
- Antenna diversity
- Steerable antenna arrays

Embedded - Myths & Realities

- Traditional Embedded CPU concerns
  - Cost
  - Performance
  - Power
  - Real-time behavior
  - Development Environments

SONICblue

Cost

- Still more important than everything else put together
- But not CPU cost - total cost
  - System HW cost (processor, memory, I/O)
  - Packaging costs (power driven)
  - Development cost
    - Almost all embedded development is moving to HLL
    - Validation costs dominate
  - Service costs
- Die size is seldom the most important issue
  - Pins still tend to dominate over mm^2
- $100 product = <$5 integrated processor (10 mm^2 CPU)
- $1000 product = <$35 processor (40 mm^2 CPU)

Power

- Battery powered systems - total energy is critical
  - Lower power is always better
- AC-powered systems - airflow concerns dominate
  - Just need to hit power target

- But - CPU power is not the current bottleneck for connected home products - analog I/O is.

	Total Power	CPU Power
Laptop PC	20W	6W
Webpad	12W	2W
PDA	2W	500mW
Rio MP3 player	150mW	50mW

SONIC blue

Real-time

- Hard real-time constraints are no longer an issue
  - No QOS on disks or networks
  - Communication errors
  - Caches are manditory and modeling tools don't exist

High-level compensation mechanisms are already in place

  - Large buffers
  - Unchanged human perception
    - law of large numbers - most timing problems smooth out
  - Existing failure rates - within consumer tolerance threshold

Yet - limiting performance variation speeds validation

SONIC blue

Development

- Software development efficiency drives cost
  - Rio MP3 player - ~ 2M units sold.
  - CPU cost ~$9/unit
  - Fully burdened SW development cost ~$12/unit
  - Schedule is even more important than cost
- HLL code is used for almost everything
- OS becoming common; Heavy use of library code
- Still few tools for validation
  - Primarily in-situ testing

Better tools are the most important problem

Research Directions

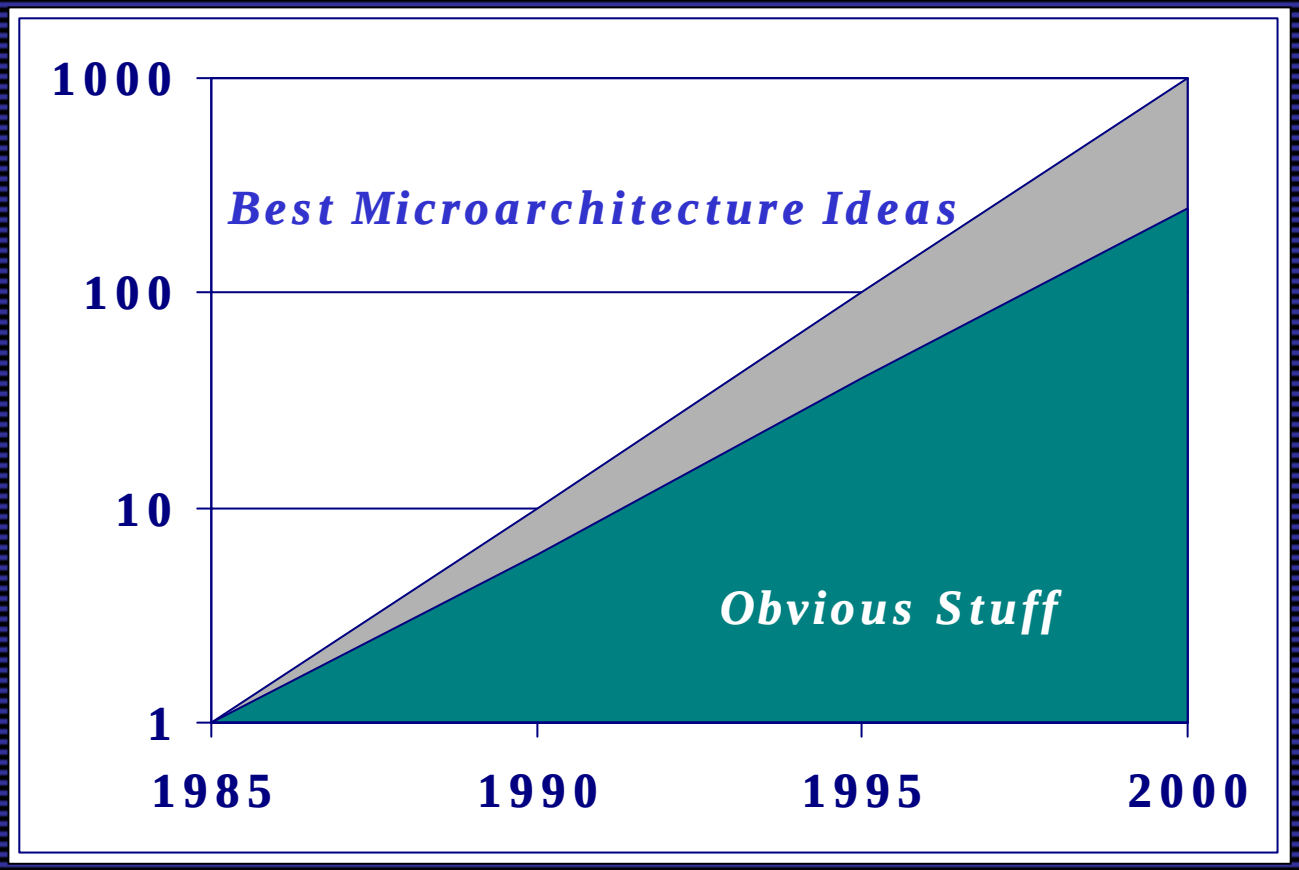

Obvious Stuff

Faster transistors
More memory BW
Bigger caches
32-bit instructions
Wider datapaths
More registers
Deeper Pipelines
Multiplier/Shifter/FP

Tools and Methodology

- Quantitative Microarchitecture still critical
  - Processors and memory systems must be highly optimized
    - performance/$
    - performance/mW
- Compilers - stable code characteristics
  - predictable performance
  - predictable code size
  - predictable numerical accuracy
- Full system simulation/verification
  - power and performance
  - including analog components

Advanced Tools

- Algorithm level compilation (i.e. Matlab)
- Automated float-fixed mapping
- Compiling I/O streams/DMA
- Specification-driven code synthesis
  - Compile to deadline
  - Compile to power budget
  - Compile to code size
  - Compile to accuracy
  - Multiple constraints

Microarchitectural Features

- Appropriate Data Types
  - fixed-point
  - complex
  - bit-fields
  - big-endian data
- Appropriate Operations
  - MAC
  - fast multiply & divide
  - bit reversal
  - GF multiply
  - Byte permutation
  - Bit-field extraction/insertion
  - Pop count/first one

SONIC blue

Microarchitectural Features

- ILP is good
  - Vectors ofter win cost/performance
  - VLIW - stable high performance across code base
  - Superscalar - power/area tradeoffs are difficult
  - Multiprocessors?
    - work great with tool support
- Subword Parallelism (ala MMX) (i.e. - cheap vectors)
- Adequate precision
- Accumulators
  - Need extra precision
  - Subword parallel operations need them too

SONIC blue

Microarchitectural Features

- Software prefetching
- Static branch prediction/prepare to branch
- Predication
- Lockable set-associative caches
- Low-temporal-variation MMU
  - separate paging/protection granularity
- Architecture-level security
- Code compression
- Data compression

One more challenge

- Reliability
- Availability
- Servicability

- How do I build 4-6 Σ systems - including software

Likely Dead Ends

- Aggressive speculation
  - aggressive branch prediction
  - multiple-path execution
  - value prediction
  - trace caches
- Dynamic compilation/optimization
  - Temporal correctness becomes untestable
  - User impression are formed a time of purchase
  - Automated code updates would slow down systems

Profiling

- Standard profile-driven optimization is impractical

Develop → Validate → Profile → Optimize → Regress → Release

- Validation depends on final code properties
  - performance
  - code & data size

SONIC blue

Conclusions

- Networked home entertaiment will drive the next wave of CPU growth
  - Home networking
  - Multimedia systems
- Device capabilities drive service revenue
- Processor capabilities are limited by cost & power
- Compelling features will continue to drive performance
- Process of quantitative CPU design and analysis is still valid
  - Performance/cost/power tradeoffs are different
  - More predictable behaviors
- Better design tools are the greatest challenge